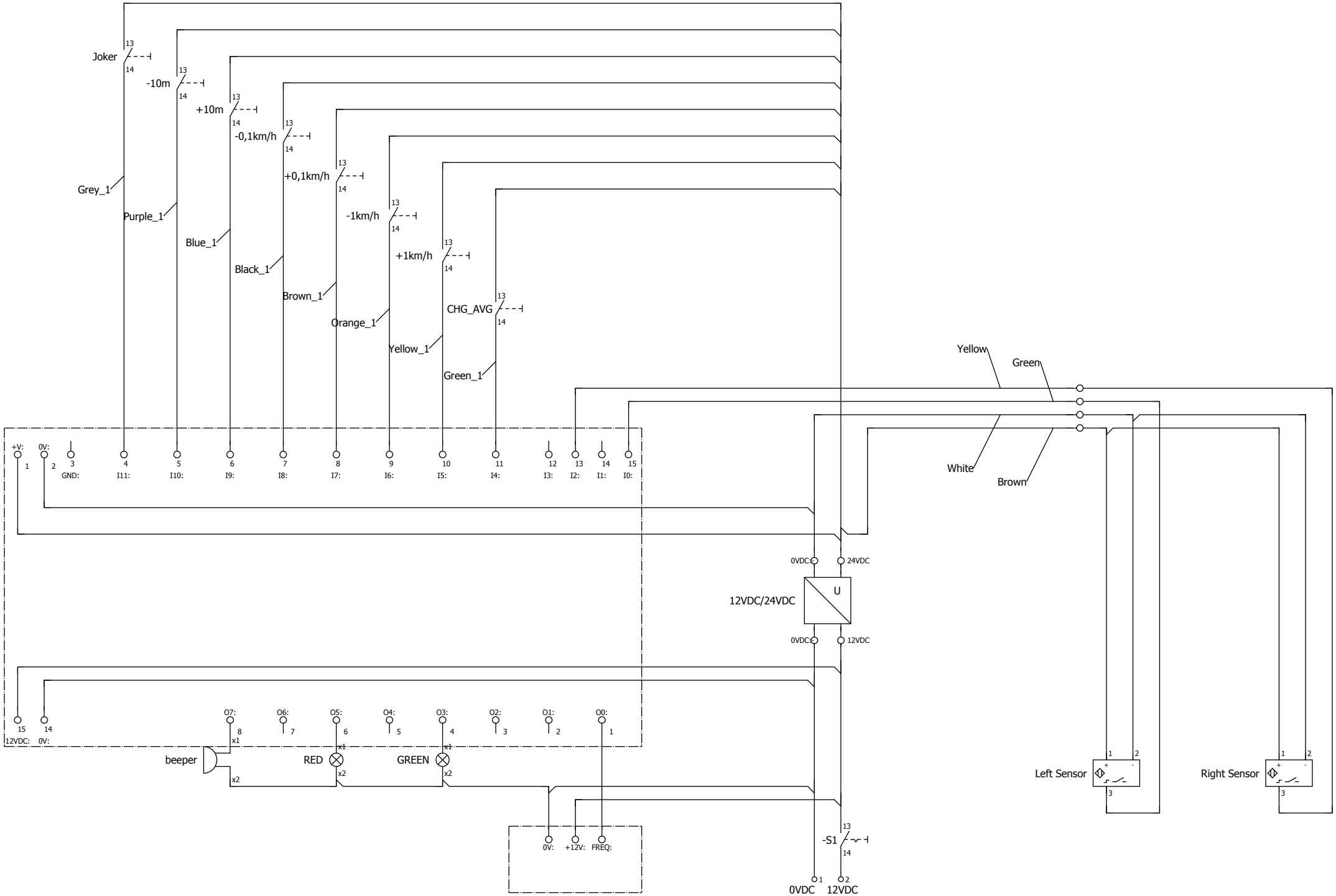


| | | | | | | | | | |
|---|---|---|---|---|---|---|---|---|---|
| | | | Date | 8/10/2016 | EPLAN | EPLAN Software & Service GmbH & Co. KG | | = | |
| | | | Ed. | Spyros | | | | + | |
| | | | Appr | | Project template with IEC identifier structure | | IEC_tpl001 | Page | RM43 |
| Modification | Date | Name | Original | | Replacement of | Replaced by | | Page | 1 |